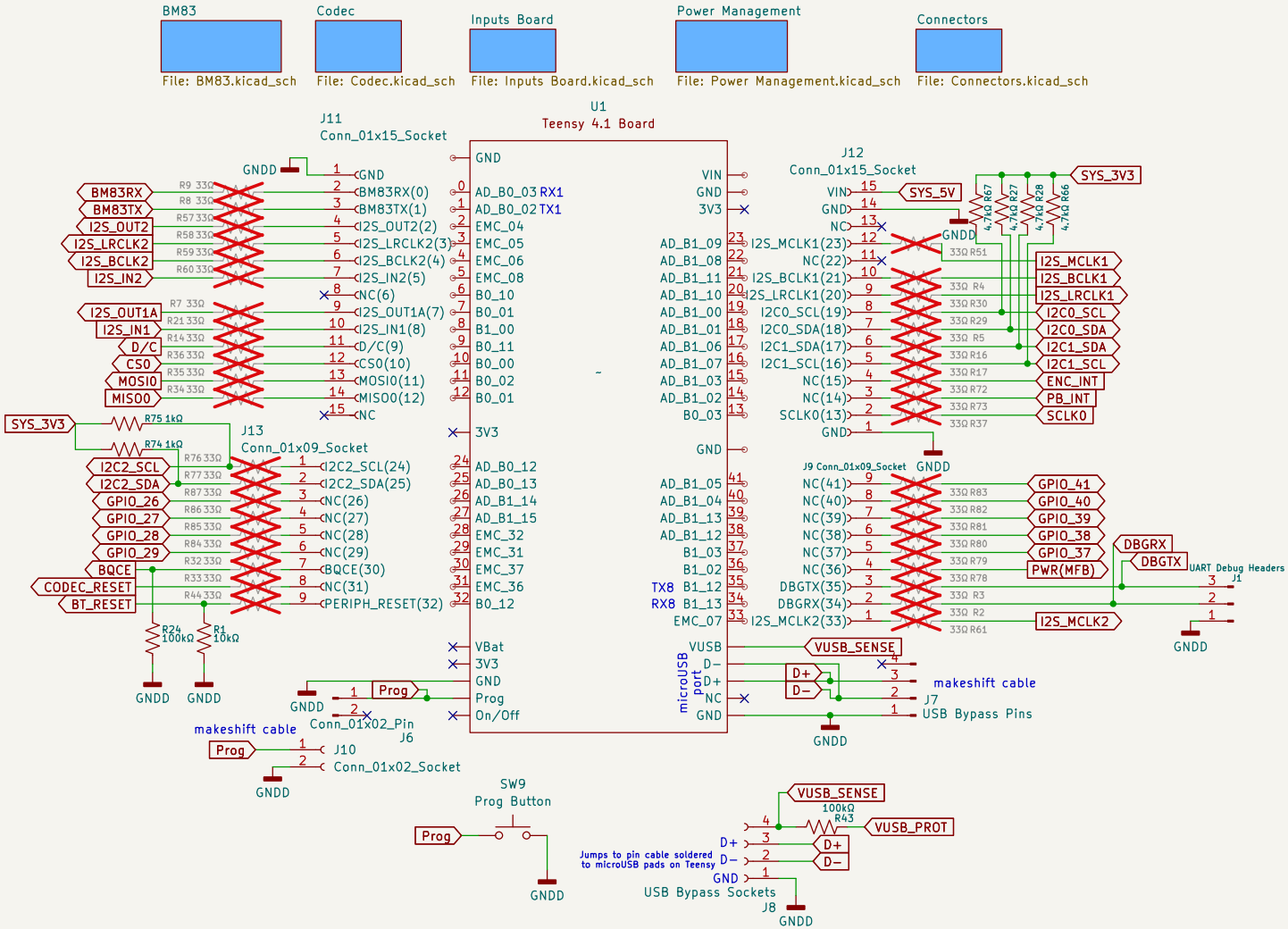
BM83
File: BM83.kicad_sch
Codec
File: Codec.kicad_sch
Inputs Board
File: Inputs Board.kicad_sch
Power Management
File: Power Management.kicad_sch
Connectors
File: Connectors.kicad_sch
U1
Teensy 4.1 Board
J11
Conn_01x15_Socket
J12
Conn_01x15_Socket
J13
Conn_01x09_Socket
J9 Conn_01x09_Socket
J6
Conn_01x02_Pin
J10
Conn_01x02_Socket
J7
USB Bypass Pins
J8
USB Bypass Sockets
J1
UART Debug Headers
SW9
Prog Button
makeshift cable
microUSB port
Jumps to pin cable soldered to microUSB pads on Teensy
GND
GNDD
SYS_3V3
SYS_5V
BM83RX
BM83TX
I2S_OUT2
I2S_LRCLK2
I2S_BCLK2
I2S_IN2
I2S_OUT1A
I2S_IN1
D/C
CS0
MOSI0
MISO0
I2C2_SCL
I2C2_SDA
GPIO_26
GPIO_27
GPIO_28
GPIO_29
BQCE
CODEC_RESET
BT_RESET
Prog
VUSB_SENSE
VUSB_PROT
I2S_MCLK1
I2S_BCLK1
I2S_LRCLK1
I2C0_SCL
I2C0_SDA
I2C1_SDA
I2C1_SCL
ENC_INT
PB_INT
SCLK0
GPIO_41
GPIO_40
GPIO_39
GPIO_38
GPIO_37
PWR(MFB)
DBGRX
DBGTX
I2S_MCLK2
D+
D−

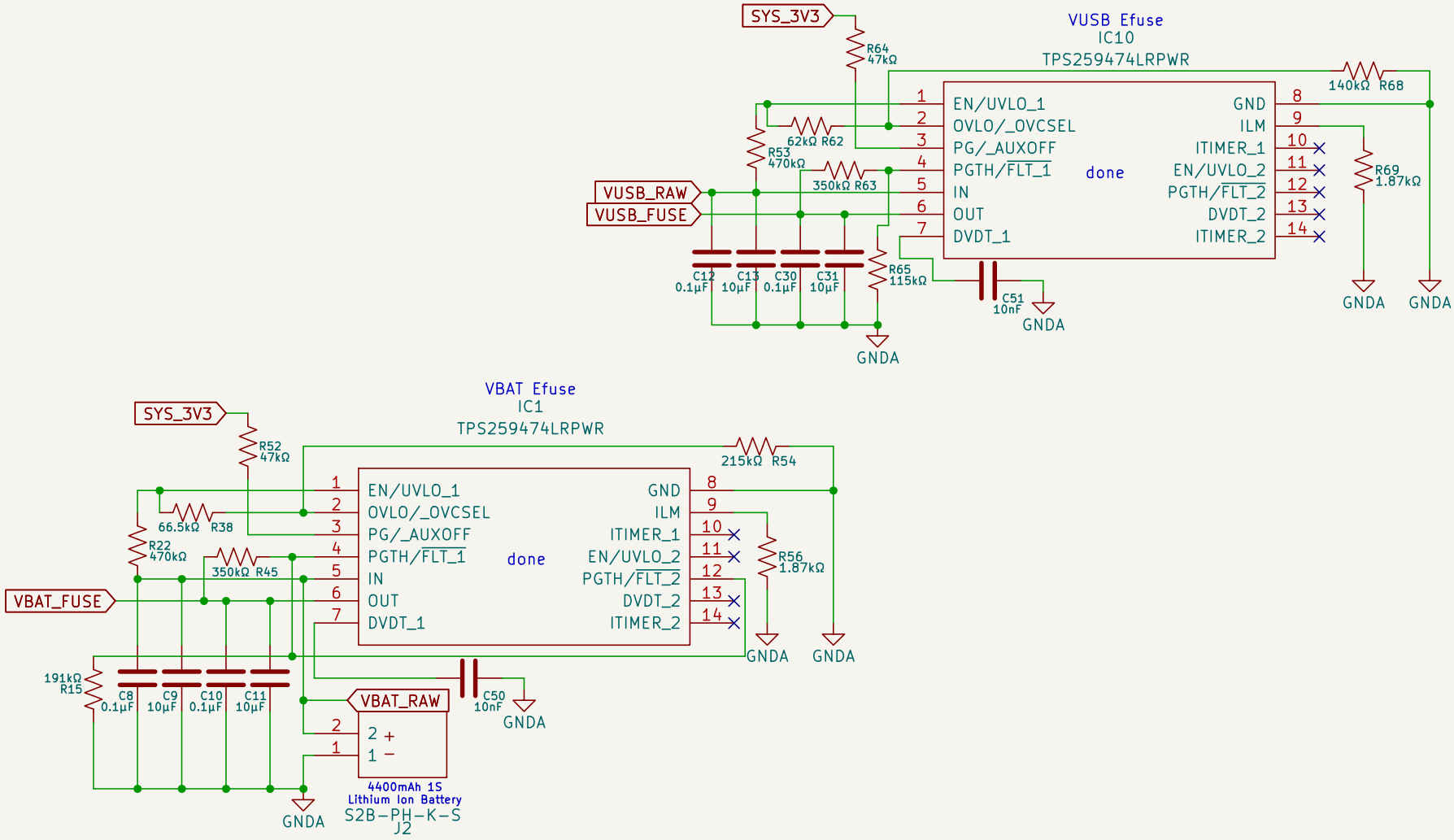
VUSB Efuse
IC10
TPS259474LRPWR
SYS_3V3
R64
47kΩ
140kΩ R68
EN/UVLO_1
OVLO/_OVCSEL
PG/_AUXOFF
PGTH/FLT_1
IN
OUT
DVDT_1
GND
ILM
ITIMER_1
EN/UVLO_2
PGTH/FLT_2
DVDT_2
ITIMER_2
done
62kΩ R62
R53
470kΩ
350kΩ R63
VUSB_RAW
VUSB_FUSE
R69
1.87kΩ
C12
0.1µF
C13
10µF
C30
0.1µF
C31
10µF
R65
115kΩ
C51
10nF
GNDA
VBAT Efuse
IC1
TPS259474LRPWR
SYS_3V3
R52
47kΩ
215kΩ R54
66.5kΩ R38
R22
470kΩ
350kΩ R45
VBAT_FUSE
R56
1.87kΩ
191kΩ
R15
C8
0.1µF
C9
10µF
C10
0.1µF
C11
10µF
C50
10nF
VBAT_RAW
2 +
1 −
4400mAh 1S
Lithium Ion Battery
S2B-PH-K-S
J2

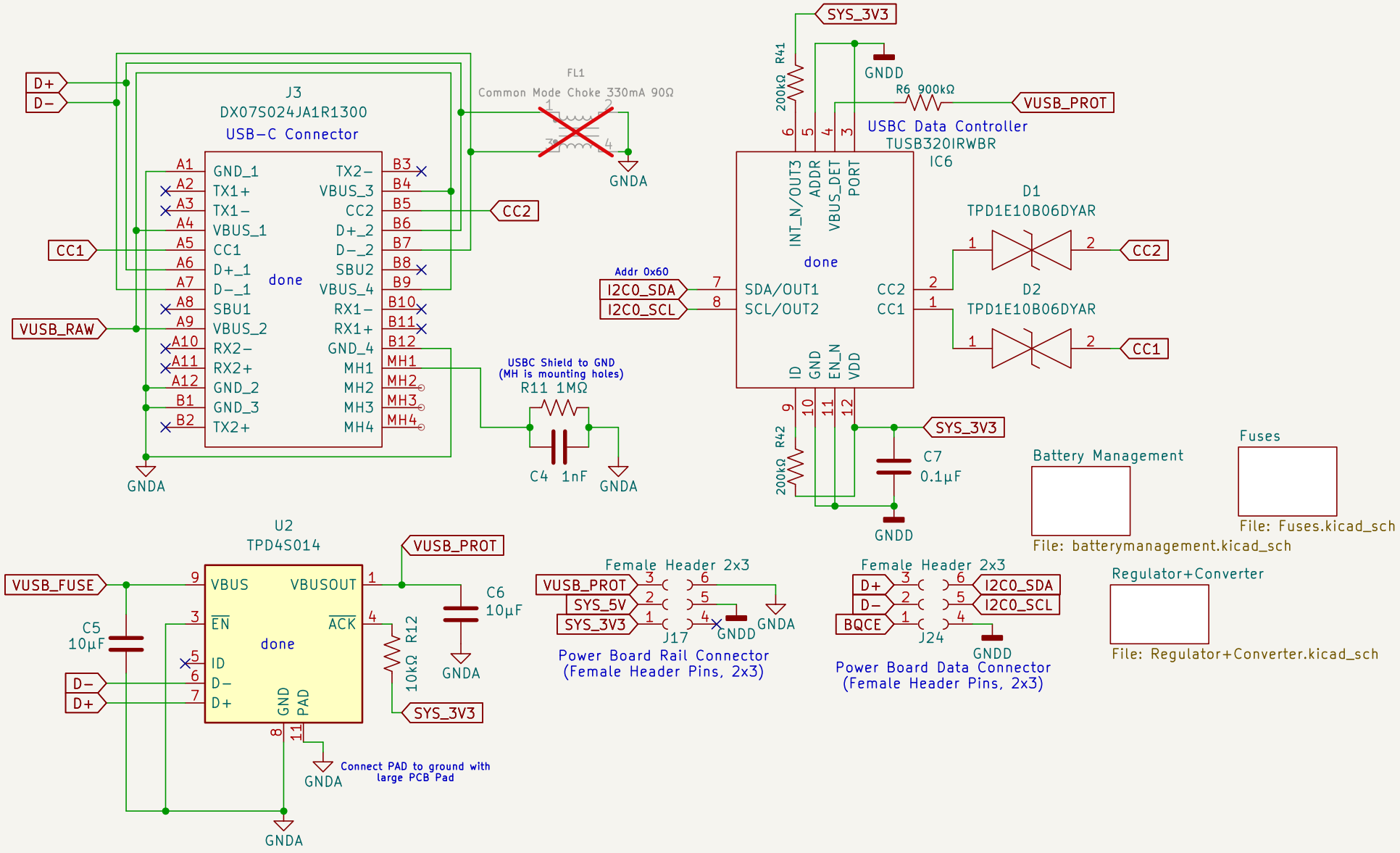
D+
D−
J3
DX07S024JA1R1300
USB−C Connector
GND_1
TX1+
TX1−
VBUS_1
CC1
D+_1
D−_1
SBU1
VBUS_2
RX2−
RX2+
GND_2
GND_3
TX2+
TX2−
VBUS_3
CC2
D+_2
D−_2
SBU2
VBUS_4
RX1−
RX1+
GND_4
MH1
MH2
MH3
MH4
done
CC1
VUSB_RAW
GNDA
FL1
Common Mode Choke 330mA 90Ω
CC2
USBC Shield to GND
(MH is mounting holes)
R11 1MΩ
C4 1nF
SYS_3V3
R41 200kΩ
GNDD
R6 900kΩ
VUSB_PROT
USBC Data Controller
TUSB320IRWBR
IC6
INT_N/OUT3
ADDR
VBUS_DET
PORT
Addr 0x60
I2C0_SDA
I2C0_SCL
SDA/OUT1
SCL/OUT2
CC2
CC1
ID
GND
EN_N
VDD
R42 200kΩ
C7
0.1µF
D1
TPD1E10B06DYAR
D2
TPD1E10B06DYAR
Battery Management
File: batterymanagement.kicad_sch
Fuses
File: Fuses.kicad_sch
U2
TPD4S014
VUSB_FUSE
VBUS
VBUSOUT
EN
ACK
ID
D−
D+
GND
PAD
C5
10µF
C6
10µF
R12
10kΩ
Connect PAD to ground with
large PCB Pad
Female Header 2x3
VUSB_PROT
SYS_5V
SYS_3V3
J17
Power Board Rail Connector
(Female Header Pins, 2x3)
Female Header 2x3
D+
D−
BQCE
I2C0_SDA
I2C0_SCL
J24
Power Board Data Connector
(Female Header Pins, 2x3)
Regulator+Converter
File: Regulator+Converter.kicad_sch

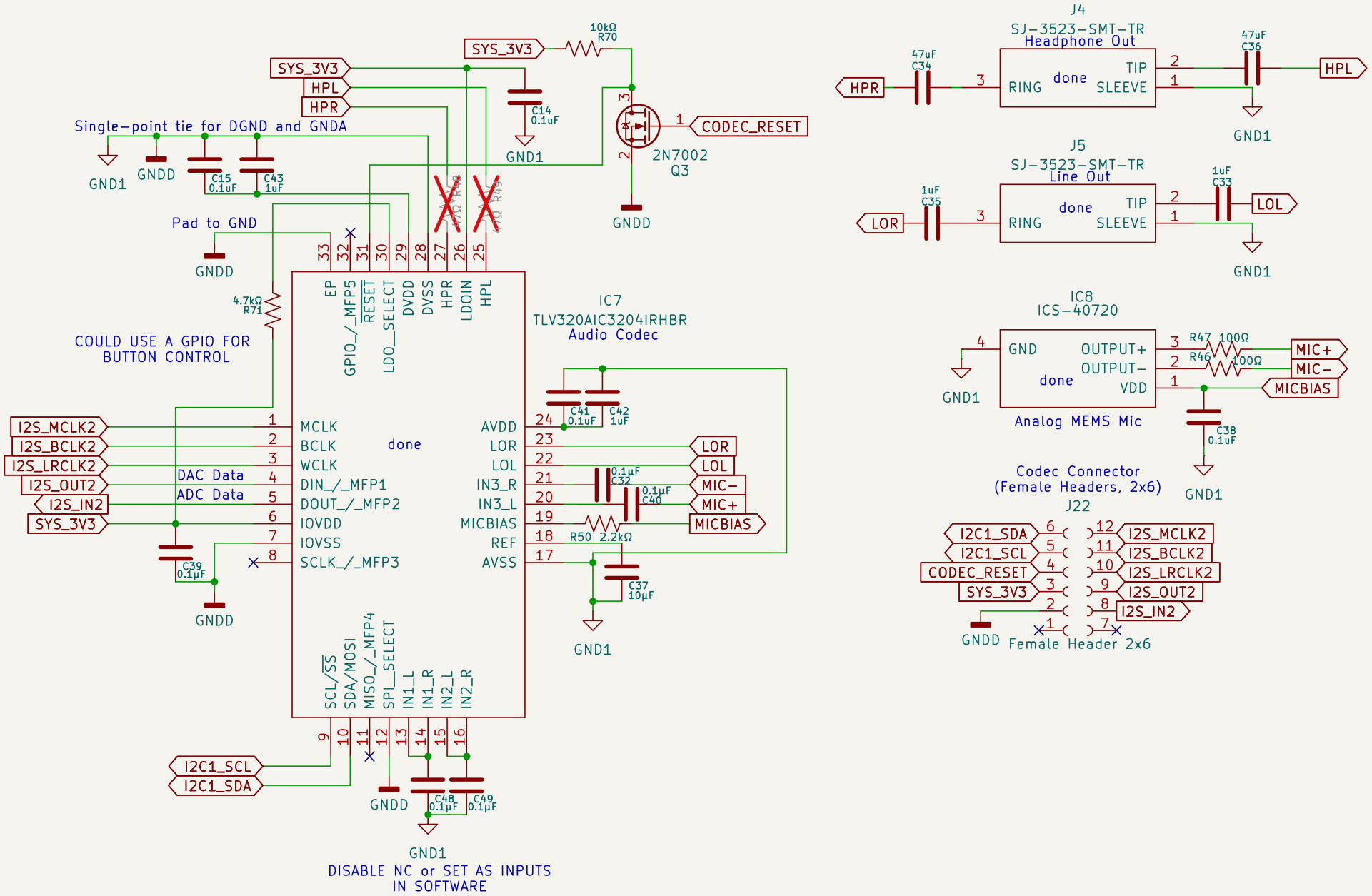
SYS_3V3
HPL
HPR
10kΩ
R70
C14
0.1uF
GND1
CODEC_RESET
2N7002
Q3
GNDD
Single-point tie for DGND and GNDA
C15
0.1uF
C43
1uF
Pad to GND
4.7kΩ
R71
COULD USE A GPIO FOR
BUTTON CONTROL
IC7
TLV320AIC3204IRHBR
Audio Codec
EP
GPIO_/_MFP5
RESET
LDO_SELECT
DVDD
DVSS
HPR
LDOIN
HPL
MCLK
BCLK
WCLK
DIN_/_MFP1
DOUT_/_MFP2
IOVDD
IOVSS
SCLK_/_MFP3
AVDD
LOR
LOL
IN3_R
IN3_L
MICBIAS
REF
AVSS
done
I2S_MCLK2
I2S_BCLK2
I2S_LRCLK2
I2S_OUT2
I2S_IN2
DAC Data
ADC Data
C41
0.1uF
C42
1uF
C32
0.1µF
C40
0.1µF
MIC−
MIC+
R50 2.2kΩ
C37
10µF
C39
0.1µF
SCL/SS
SDA/MOSI
MISO_/_MFP4
SPI_SELECT
IN1_L
IN1_R
IN2_L
IN2_R
I2C1_SCL
I2C1_SDA
C48
0.1µF
C49
0.1µF
DISABLE NC or SET AS INPUTS
IN SOFTWARE
J4
SJ-3523-SMT-TR
Headphone Out
47uF
C34
47uF
C36
RING
TIP
SLEEVE
J5
SJ-3523-SMT-TR
Line Out
1uF
C35
1uF
C33
IC8
ICS-40720
GND
OUTPUT+
OUTPUT−
VDD
R47 100Ω
R46 100Ω
MICBIAS
Analog MEMS Mic
C38
0.1uF
Codec Connector
(Female Headers, 2x6)
J22
Female Header 2x6

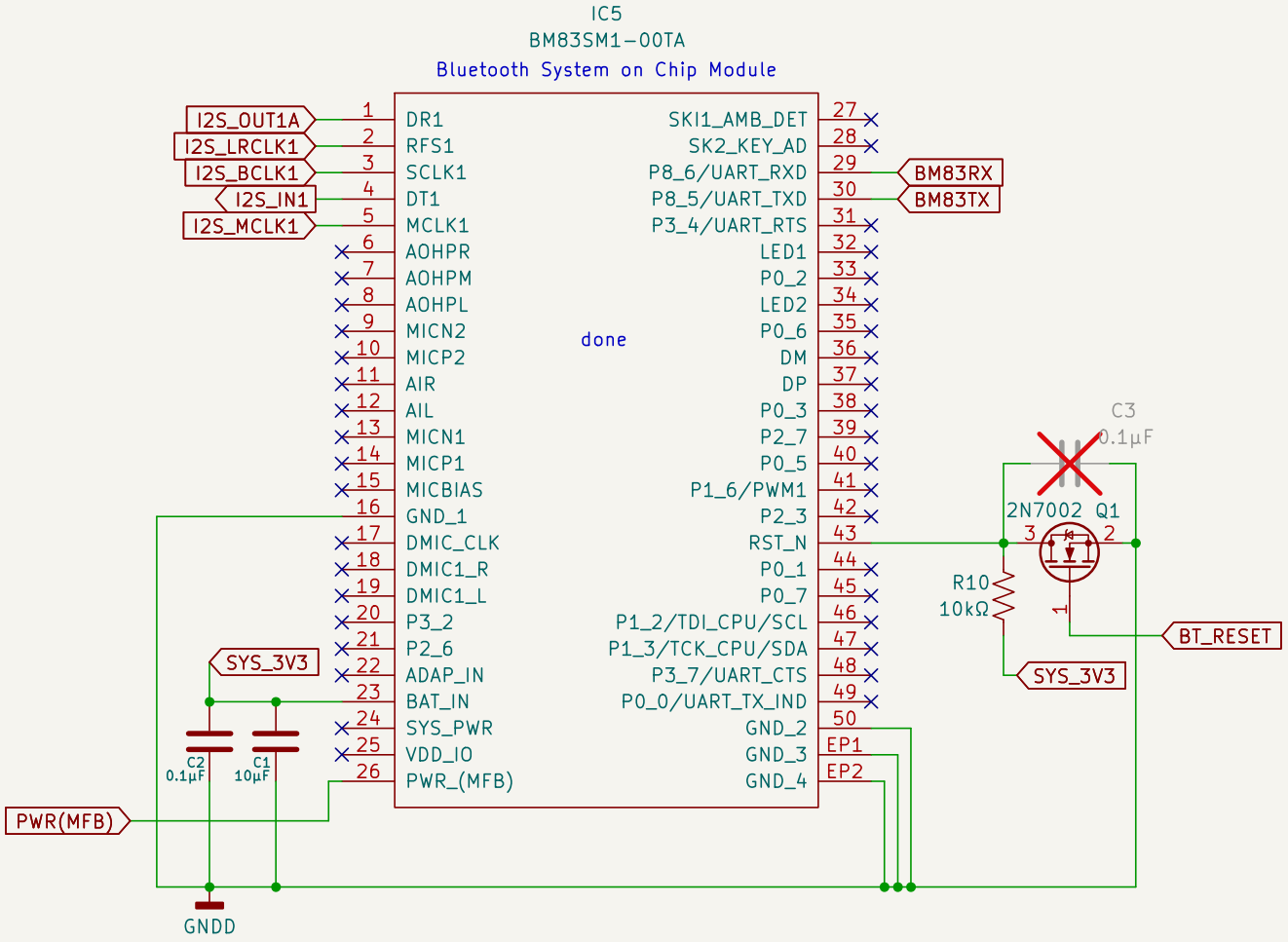
IC5
BM83SM1-00TA
Bluetooth System on Chip Module
done
I2S_OUT1A
I2S_LRCLK1
I2S_BCLK1
I2S_IN1
I2S_MCLK1
1 DR1
2 RFS1
3 SCLK1
4 DT1
5 MCLK1
6 AOHPR
7 AOHPM
8 AOHPL
9 MICN2
10 MICP2
11 AIR
12 AIL
13 MICN1
14 MICP1
15 MICBIAS
16 GND_1
17 DMIC_CLK
18 DMIC1_R
19 DMIC1_L
20 P3_2
21 P2_6
22 ADAP_IN
23 BAT_IN
24 SYS_PWR
25 VDD_IO
26 PWR_(MFB)
27 SKI1_AMB_DET
28 SK2_KEY_AD
29 P8_6/UART_RXD
30 P8_5/UART_TXD
31 P3_4/UART_RTS
32 LED1
33 P0_2
34 LED2
35 P0_6
36 DM
37 DP
38 P0_3
39 P2_7
40 P0_5
41 P1_6/PWM1
42 P2_3
43 RST_N
44 P0_1
45 P0_7
46 P1_2/TDI_CPU/SCL
47 P1_3/TCK_CPU/SDA
48 P3_7/UART_CTS
49 P0_0/UART_TX_IND
50 GND_2
EP1 GND_3
EP2 GND_4
BM83RX
BM83TX
C3
0.1µF
2N7002 Q1
3
2
1
R10
10kΩ
BT_RESET
SYS_3V3
SYS_3V3
C2
0.1µF
C1
10µF
PWR(MFB)
GNDD

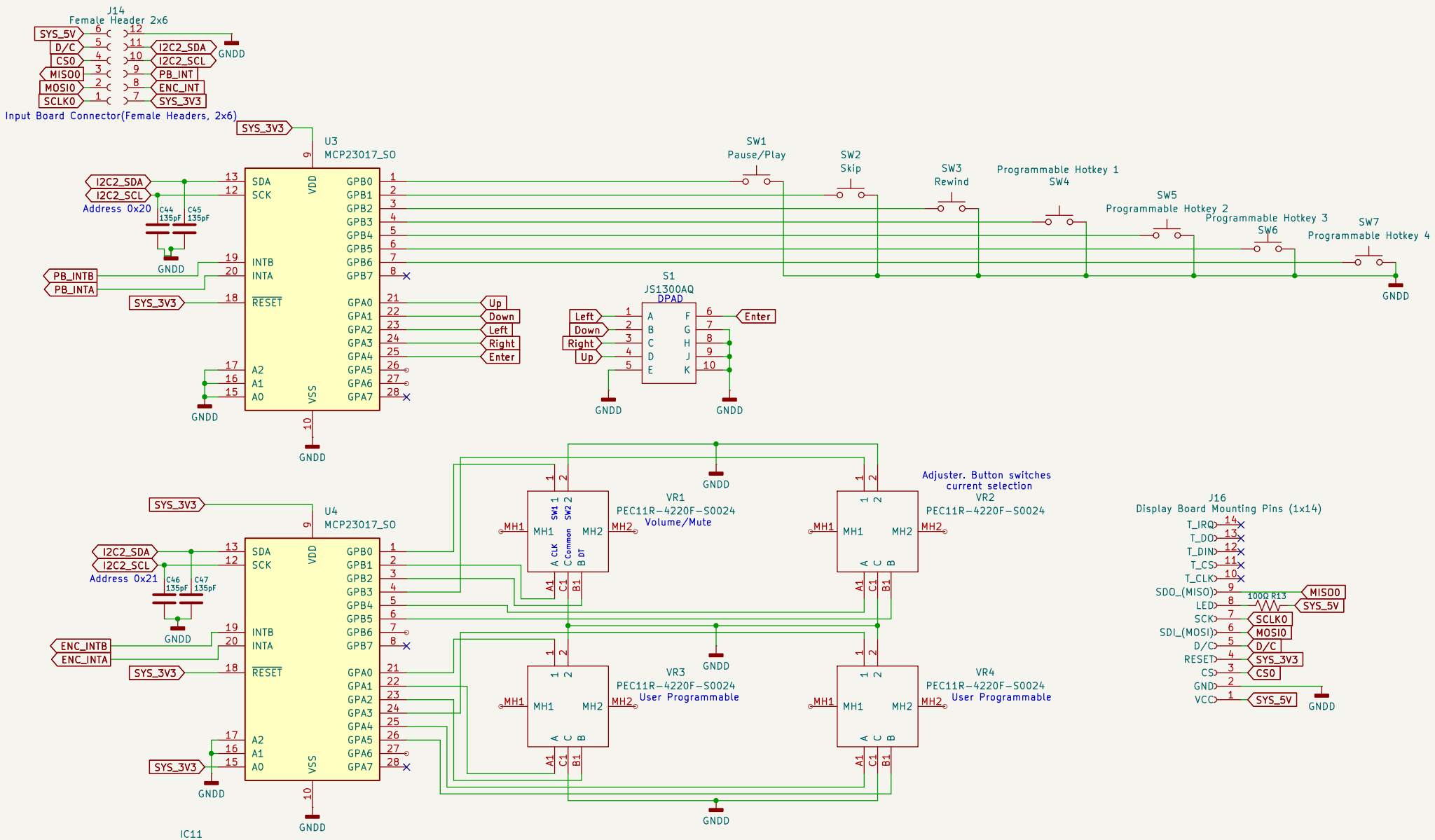

Code for configuring both chips
(config all as input pins)

```
// Enable internal 100kΩ pull-ups on all used pins
// Configure as inputs with interrupt-on-change if needed
GPPUA = 0xFF; // Port A all pull-ups enabled
GPPUB = 0xFF; // Port B all pull-ups enabled
```

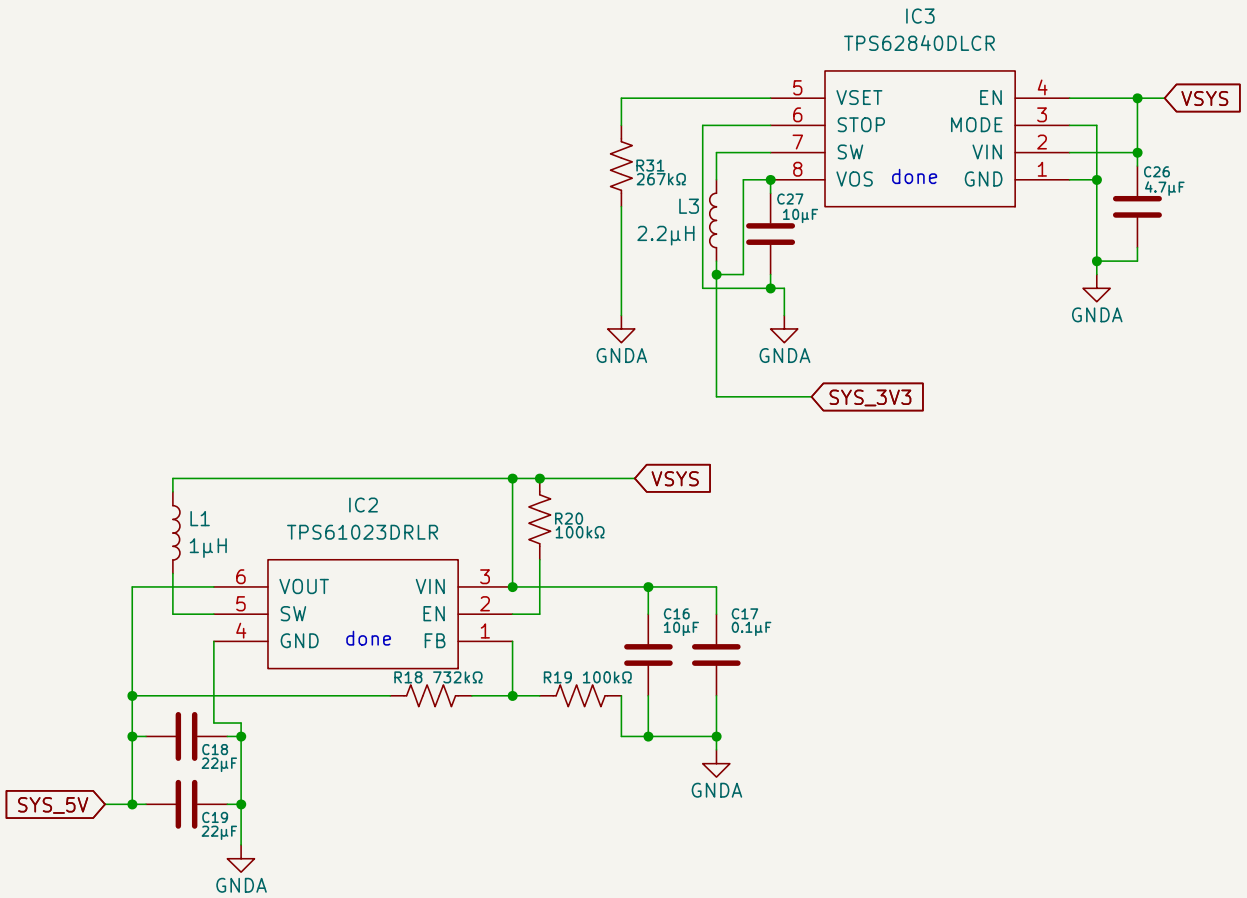
IC3
TPS62840DLCR
VSET
STOP
SW
VOS
done
EN
MODE
VIN
GND
5
6
7
8
4
3
2
1
VSYS
R31
267kΩ
L3
2.2µH
C27
10µF
C26
4.7µF
GNDA
GNDA
GNDA
SYS_3V3
IC2
TPS61023DRLR
VOUT
SW
GND
done
VIN
EN
FB
L1
1µH
R20
100kΩ
R18 732kΩ
R19 100kΩ
C16
10µF
C17
0.1µF
C18
22µF
C19
22µF
SYS_5V
GNDA
GNDA

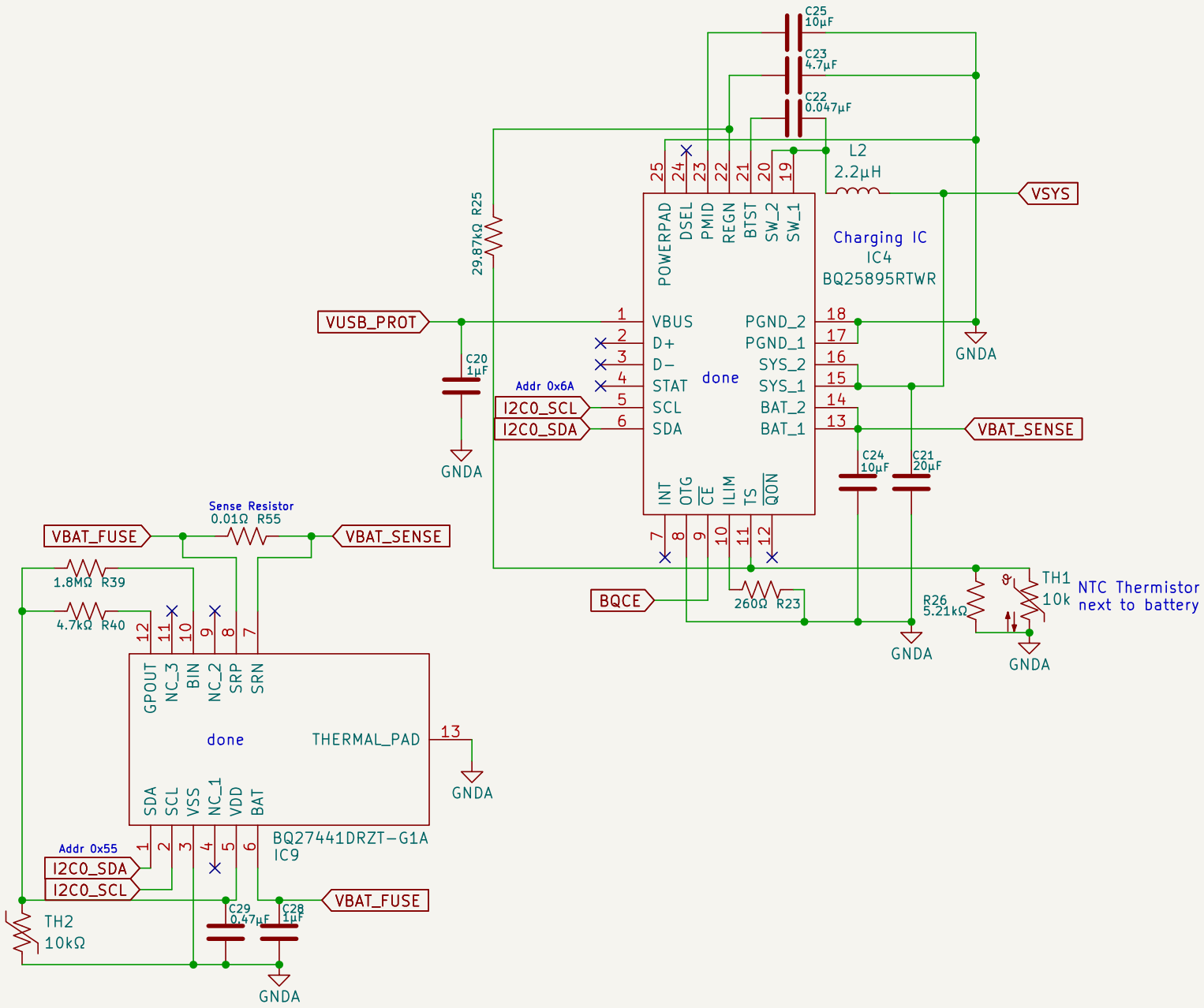
C25
10µF
C23
4.7µF
C22
0.047µF
L2
2.2µH
VSYS
29.87kΩ R25
Charging IC
IC4
BQ25895RTWR
POWERPAD
DSEL
PMID
REGN
BTST
SW_2
SW_1
VUSB_PROT
VBUS
D+
D−
STAT
SCL
SDA
PGND_2
PGND_1
SYS_2
SYS_1
BAT_2
BAT_1
done
GNDA
C20
1µF
Addr 0x6A
I2C0_SCL
I2C0_SDA
VBAT_SENSE
C24
10µF
C21
20µF
INT
OTG
CE
ILIM
TS
QON
BQCE
260Ω R23
R26
5.21kΩ
TH1
10k
NTC Thermistor
next to battery
Sense Resistor
0.01Ω R55
VBAT_FUSE
VBAT_SENSE
1.8MΩ R39
4.7kΩ R40
GPOUT
NC_3
BIN
NC_2
SRP
SRN
done
THERMAL_PAD
SDA
SCL
VSS
NC_1
VDD
BAT
BQ27441DRZT-G1A
IC9
Addr 0x55
I2C0_SDA
I2C0_SCL
VBAT_FUSE
TH2
10kΩ
C29
0.47µF
C28
1µF

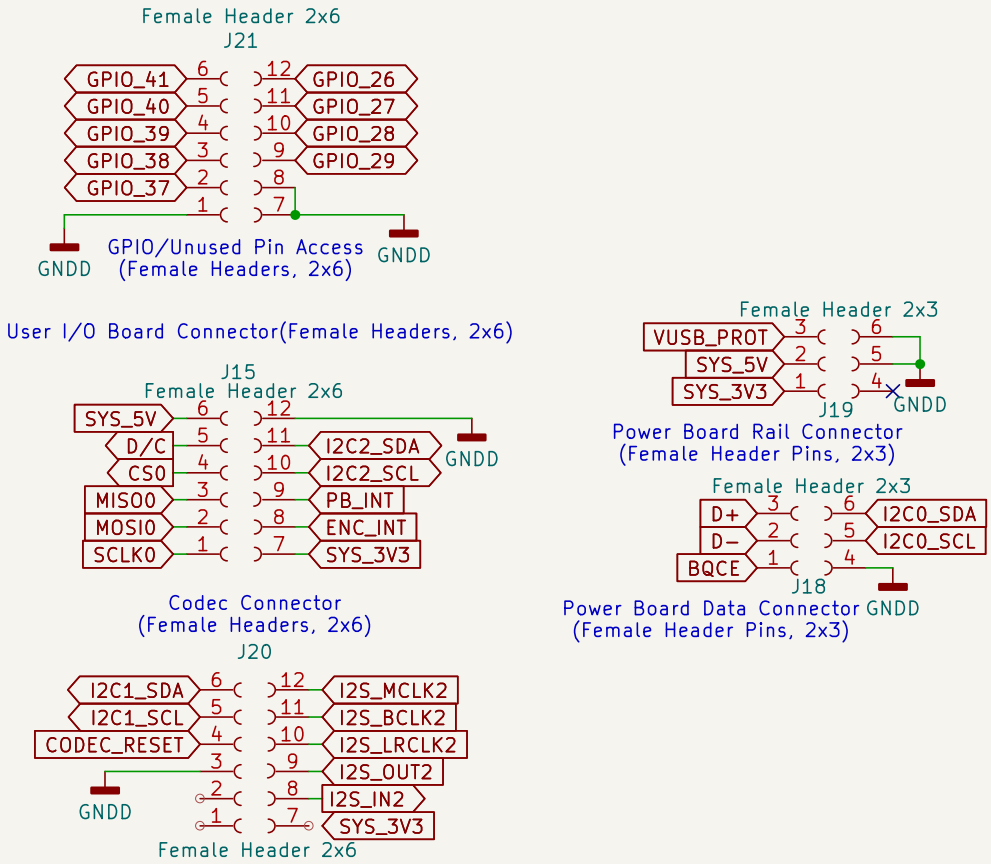
Female Header 2x6
J21
GPIO_41
GPIO_40
GPIO_39
GPIO_38
GPIO_37
GPIO_26
GPIO_27
GPIO_28
GPIO_29
GNDD
GNDD
GPIO/Unused Pin Access
(Female Headers, 2x6)
User I/O Board Connector(Female Headers, 2x6)
J15
Female Header 2x6
SYS_5V
D/C
CS0
MISO0
MOSI0
SCLK0
I2C2_SDA
I2C2_SCL
PB_INT
ENC_INT
SYS_3V3
GNDD
Codec Connector
(Female Headers, 2x6)
J20
I2C1_SDA
I2C1_SCL
CODEC_RESET
I2S_MCLK2
I2S_BCLK2
I2S_LRCLK2
I2S_OUT2
I2S_IN2
SYS_3V3
GNDD
Female Header 2x6
Female Header 2x3
VUSB_PROT
SYS_5V
SYS_3V3
J19
GNDD
Power Board Rail Connector
(Female Header Pins, 2x3)
Female Header 2x3
D+
D−
BQCE
I2C0_SDA
I2C0_SCL
J18
GNDD
Power Board Data Connector
(Female Header Pins, 2x3)